Dream Wall

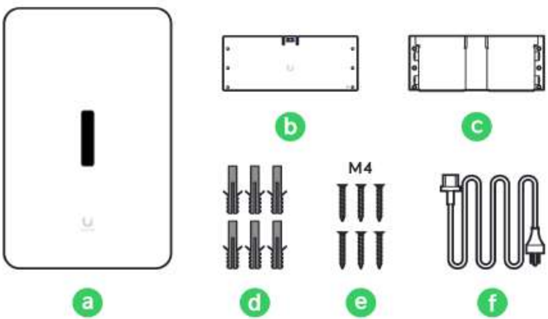

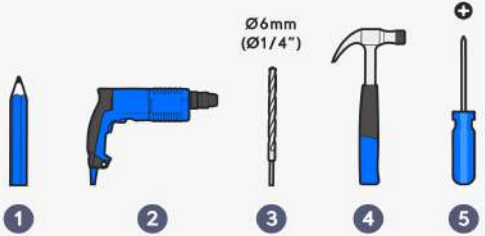
Ø6mm
(Ø1/4")
1
2
3
4
5

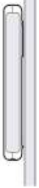

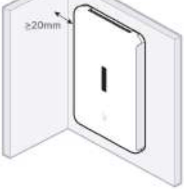

1

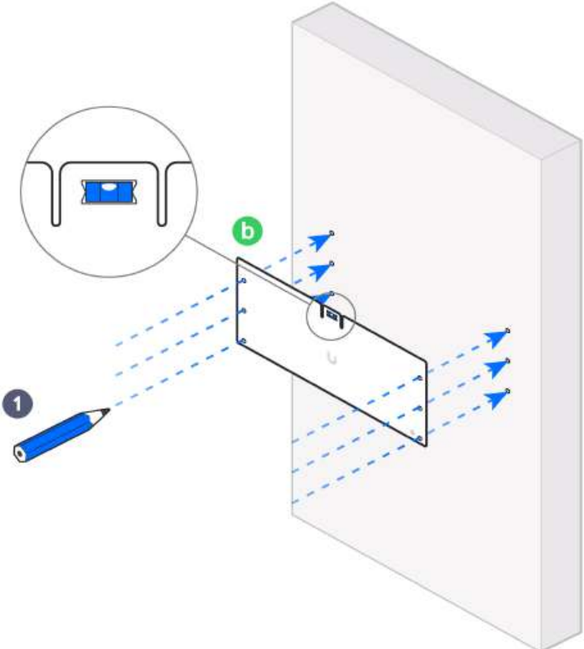

2

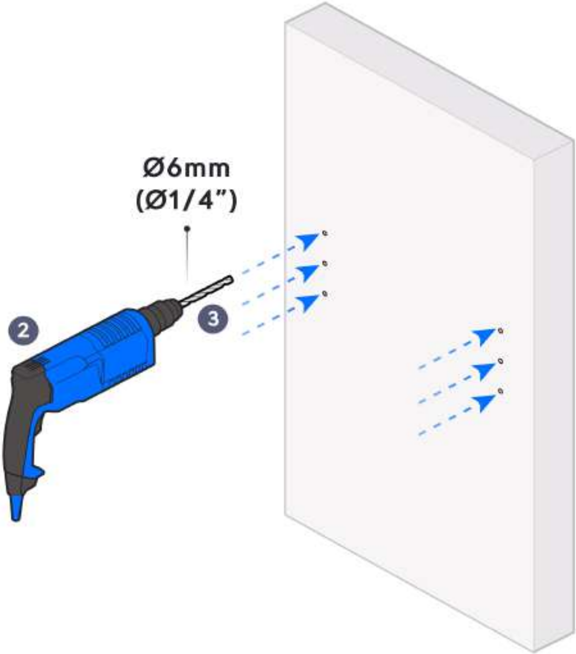

3

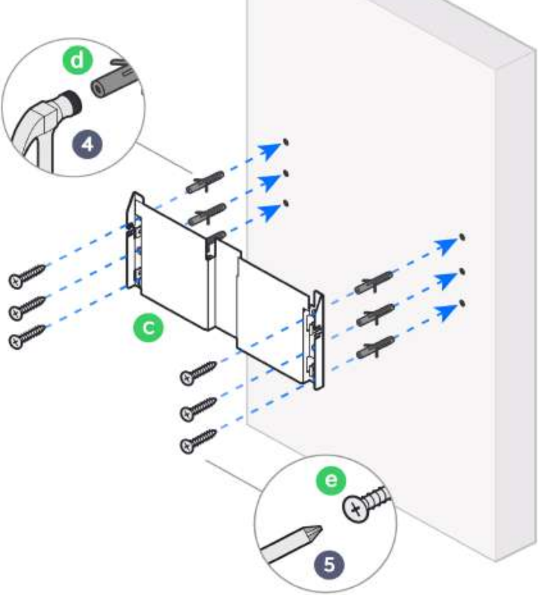

4

A

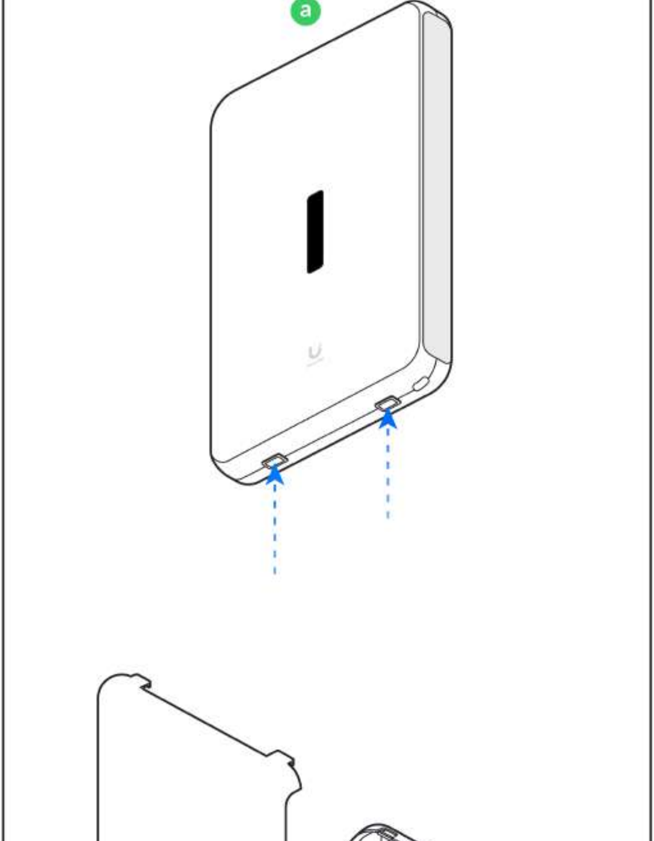

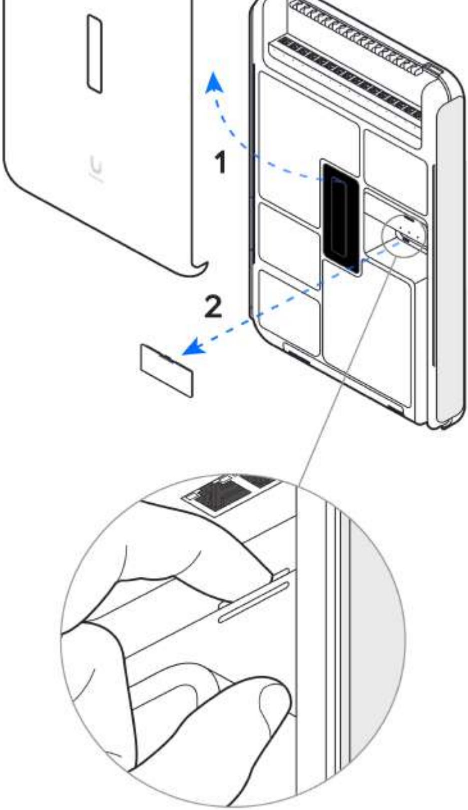

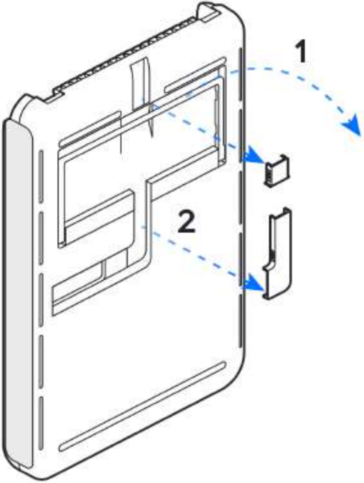

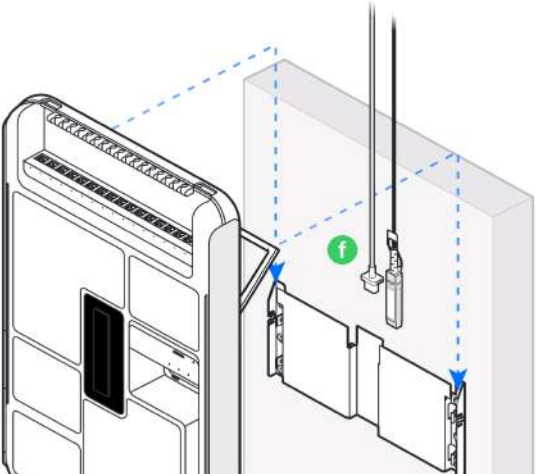

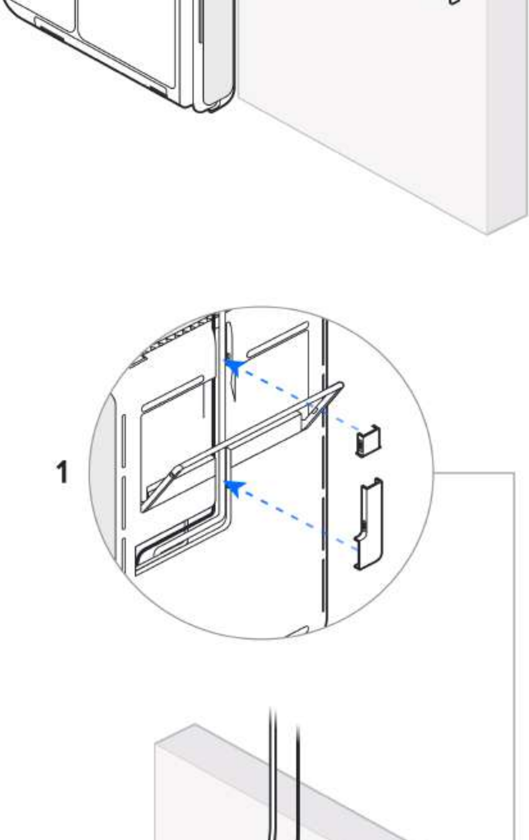

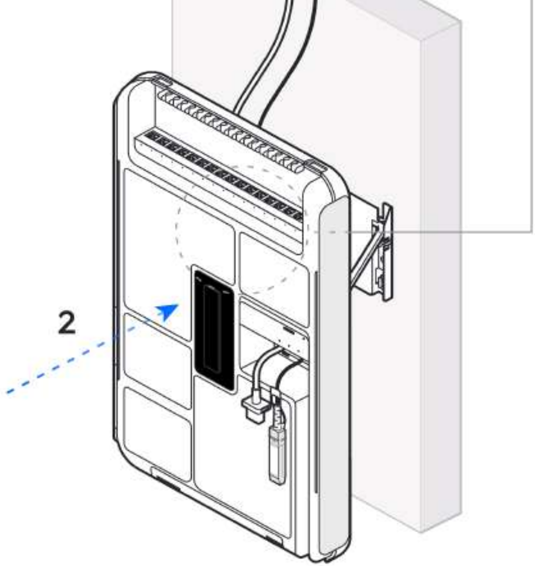

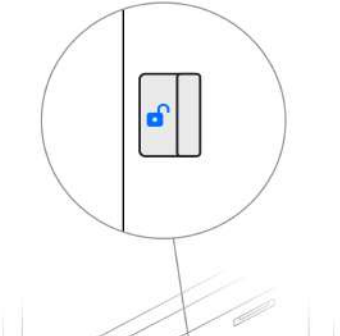

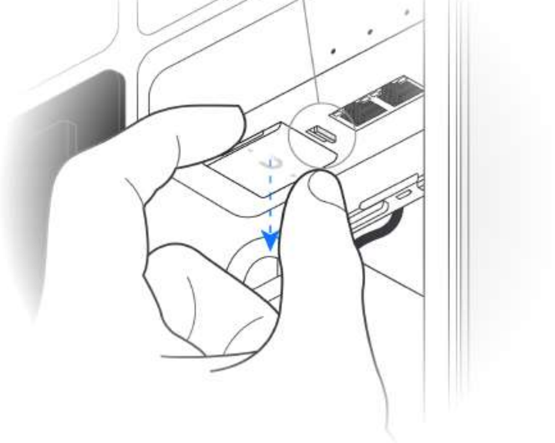

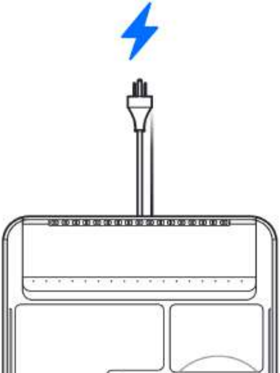

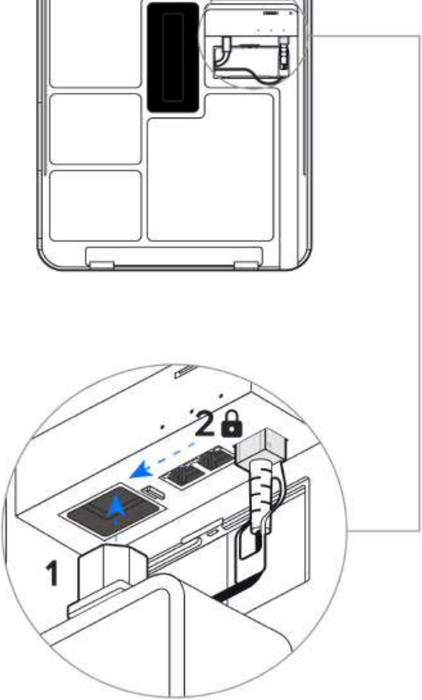

B

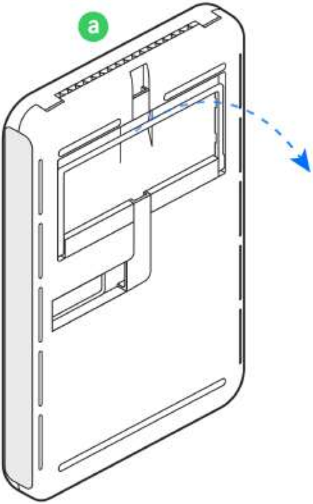

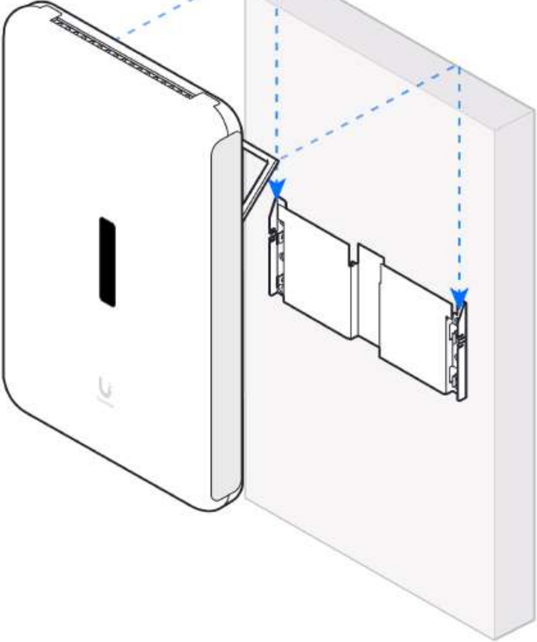

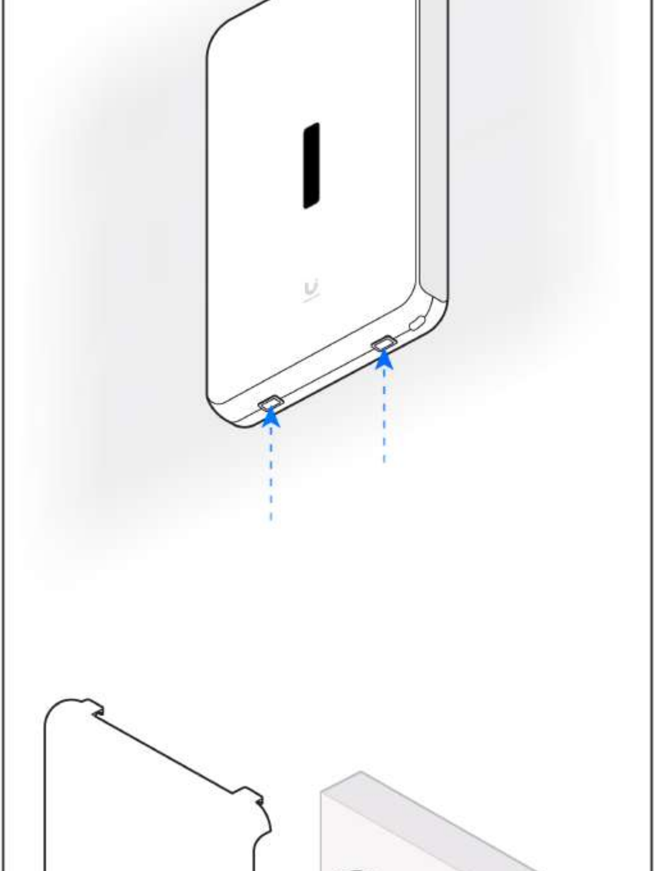

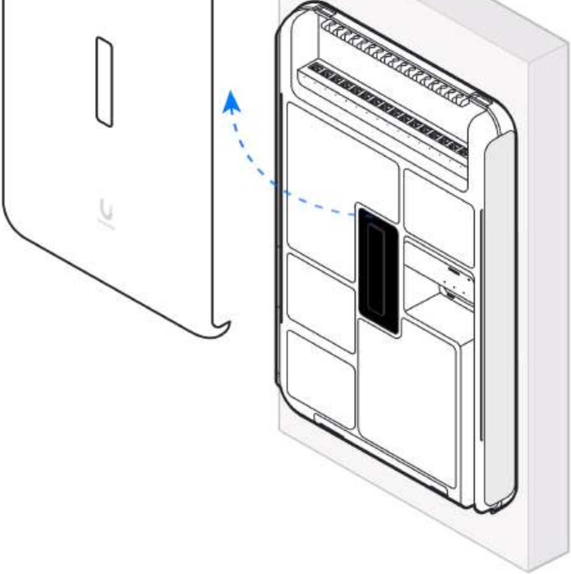

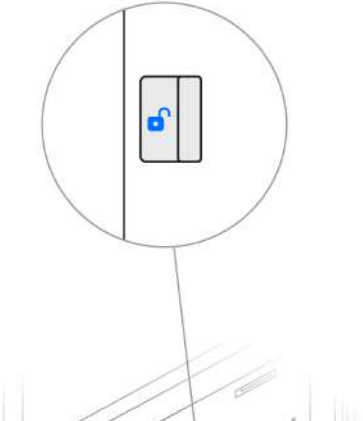

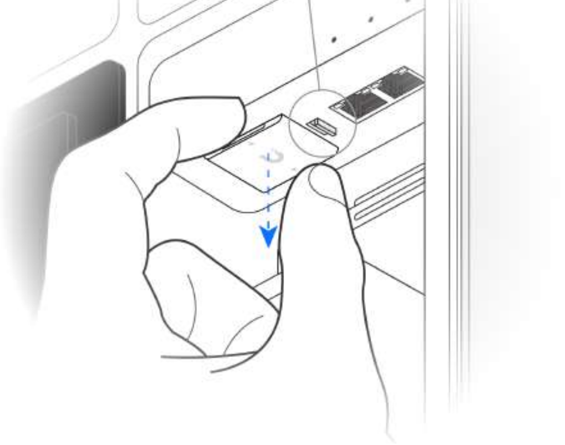

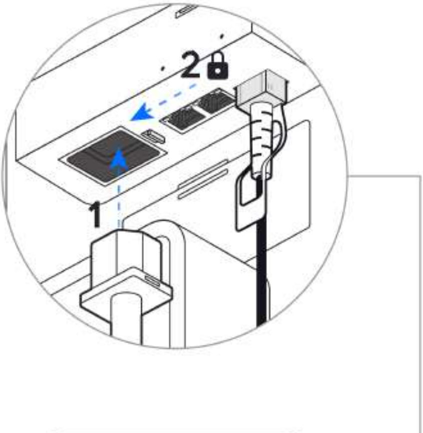

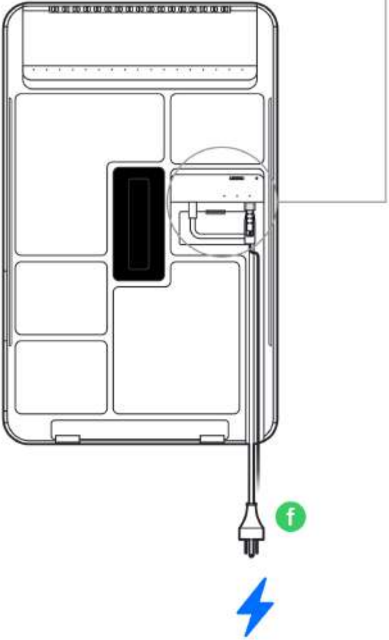

5

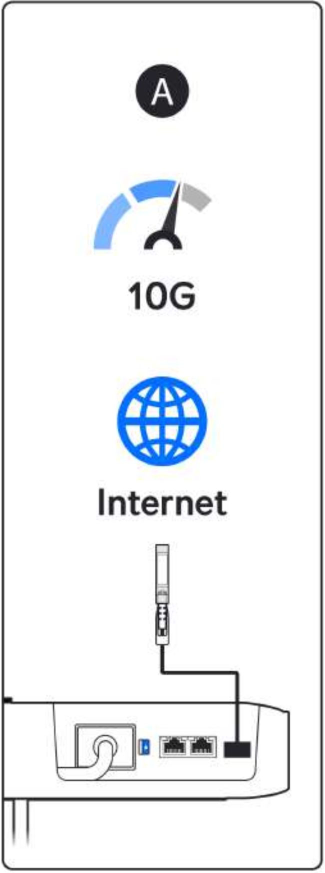
A
10G
Internet

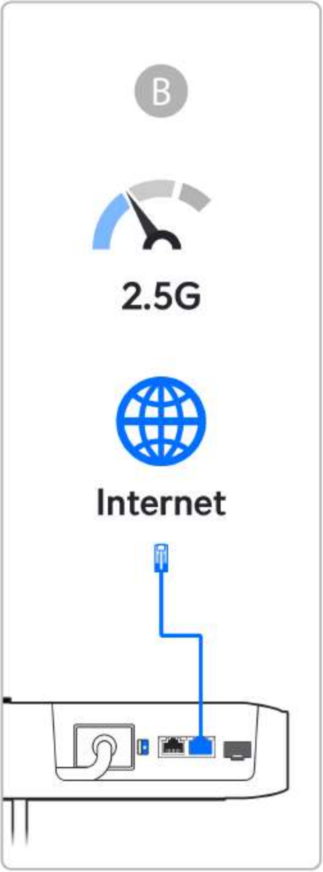
B
2.5G
Internet

6

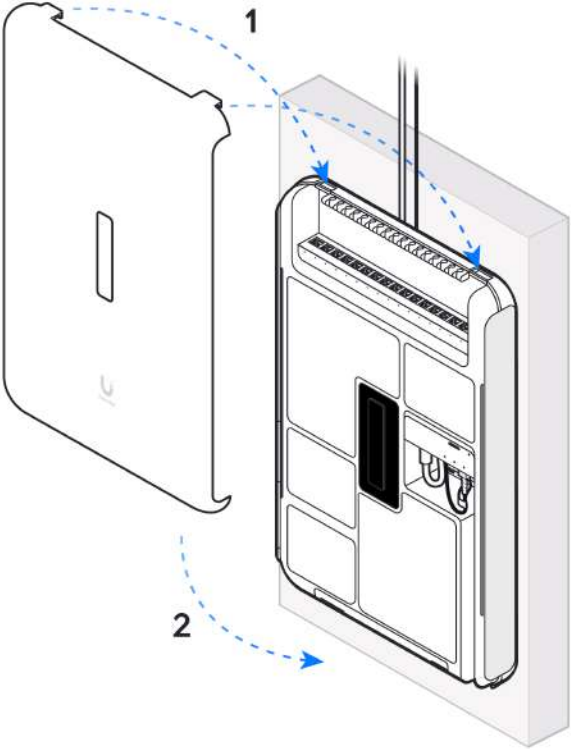

7

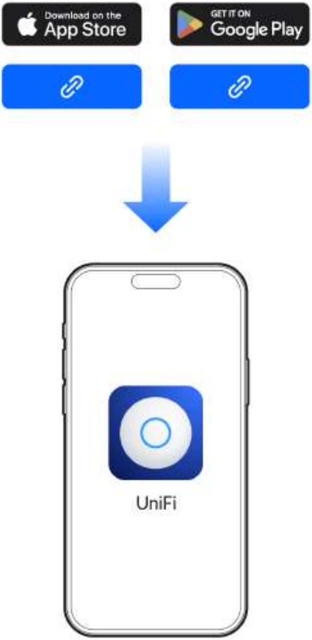
Download on the
App Store
GET IT ON
Google Play
UniFi

8

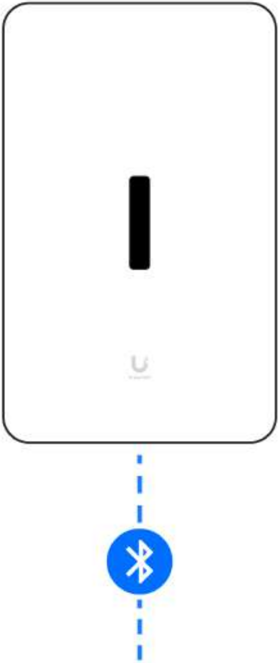

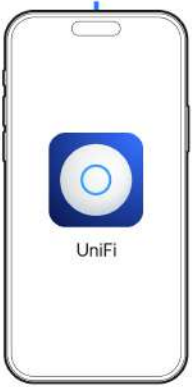

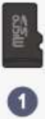

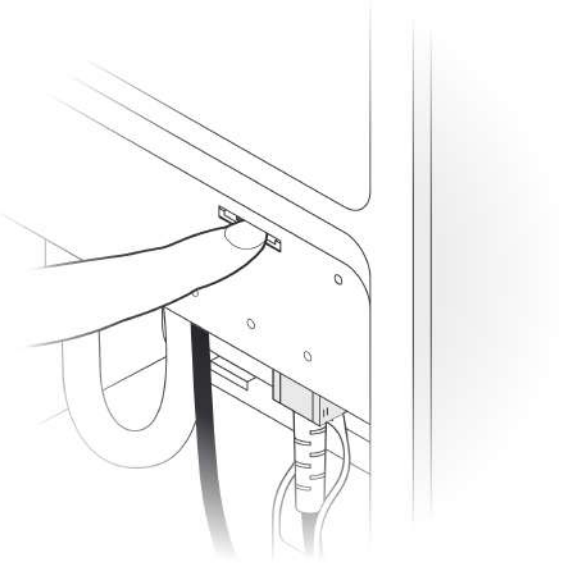

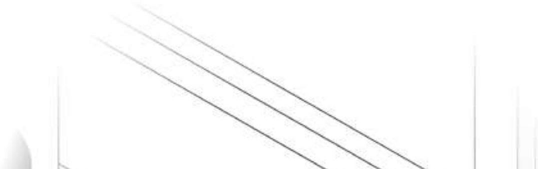

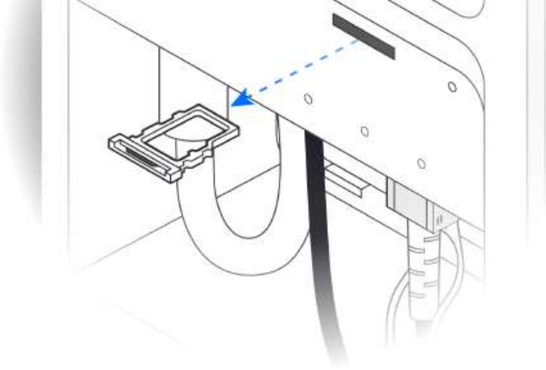

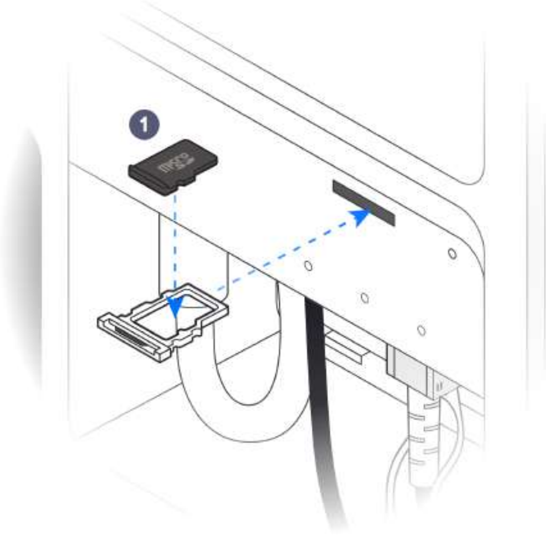

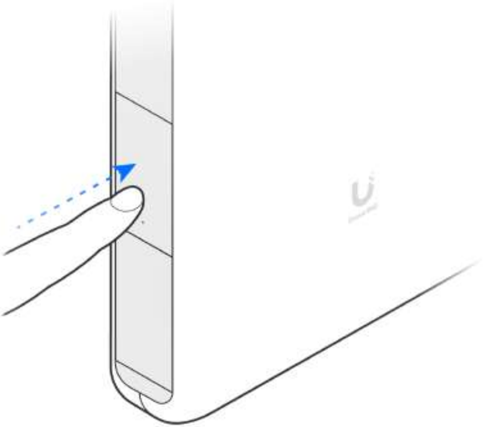

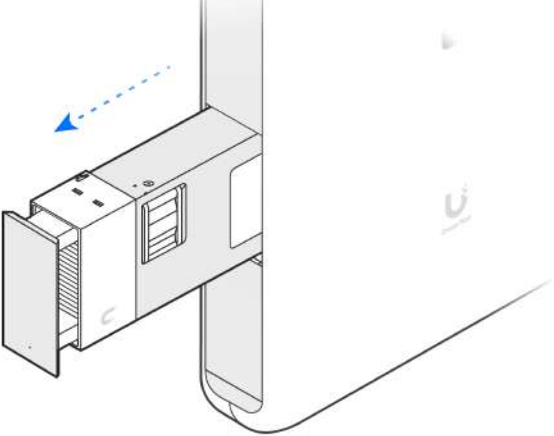

Power Module

Buy ›

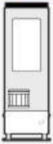

①

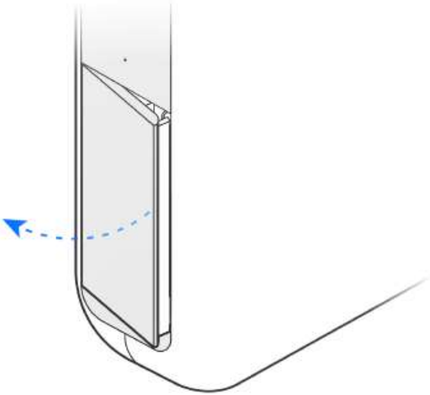

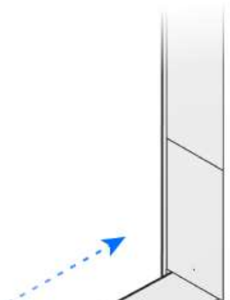

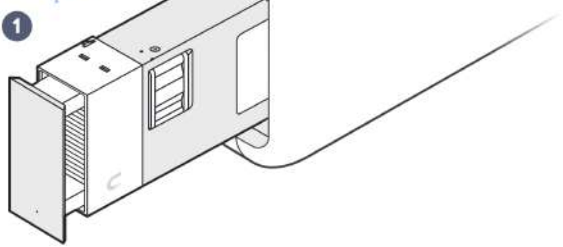

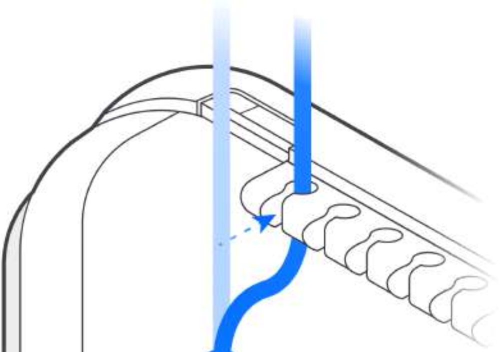

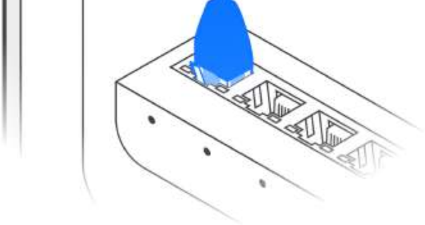

If you need further assistance, visit our Help Center or contact Ubiquiti Support.

©2021 Ubiquiti Inc. All rights reserved. Ubiquiti, Ubiquiti Networks, the Ubiquiti U logo, UniFi, and Dream Wall are trademarks or registered trademarks of Ubiquiti Inc. in the United States and in other countries. App Store and the Apple logo are trademarks of Apple Inc., registered in the U.S. and other countries. Google Play and the Google Play logo are trademarks of Google LLC. All other trademarks are the property of their respective owners.