UniFi® Protect G4 PTZ

ui.com/install

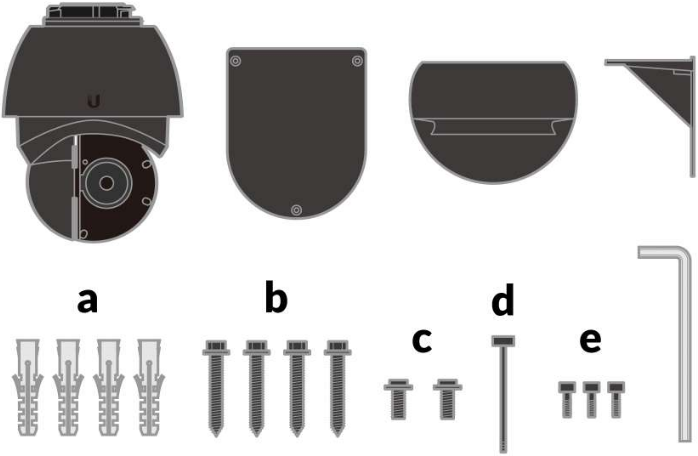

1

ui.com/install

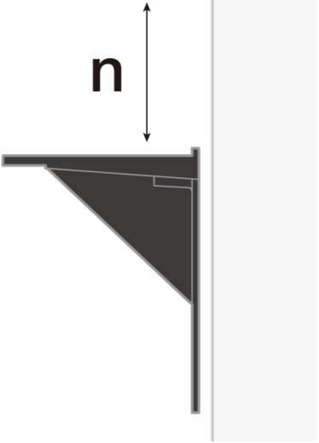

n≥8cm

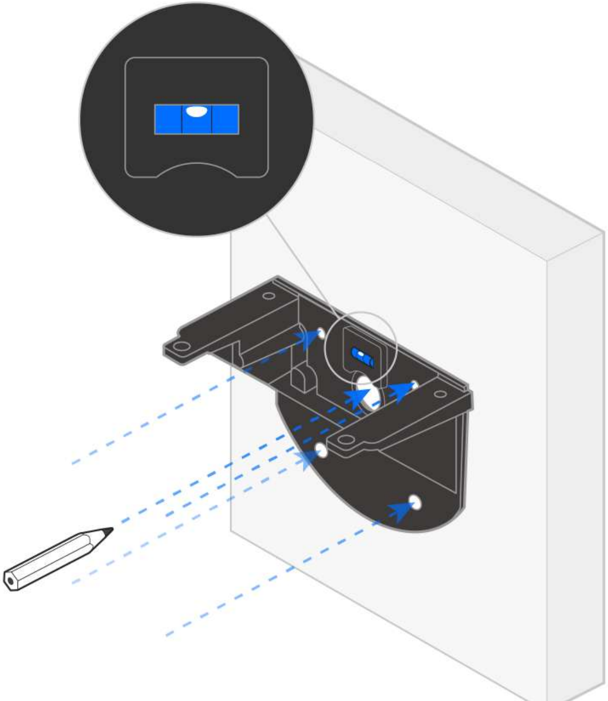

2

ui.com/install

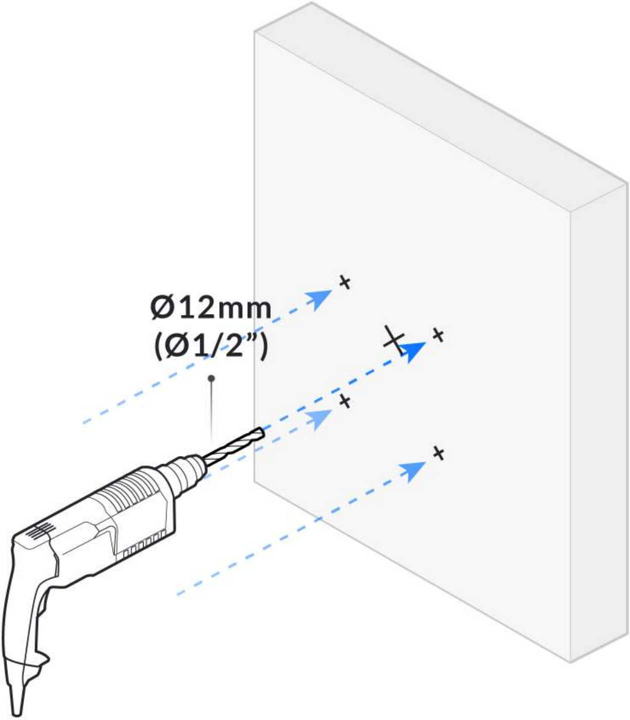

3

ui.com/install

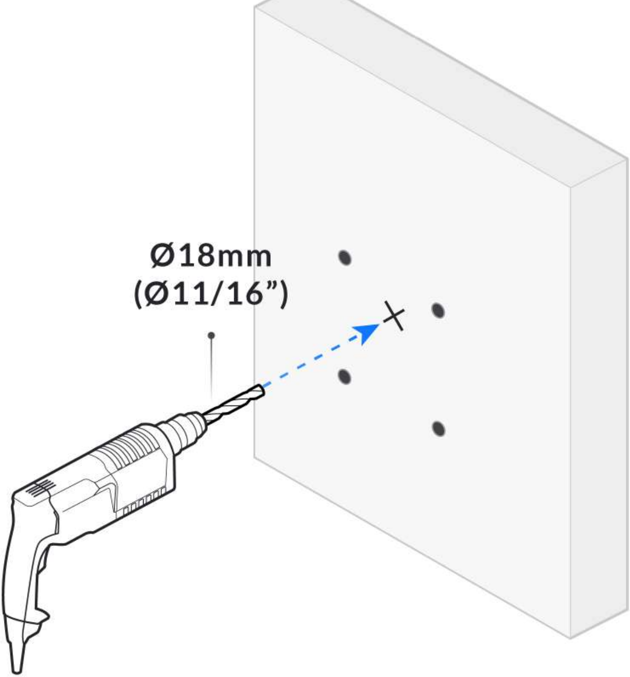
Ø18mm
(Ø11/16”)

4

ui.com/install

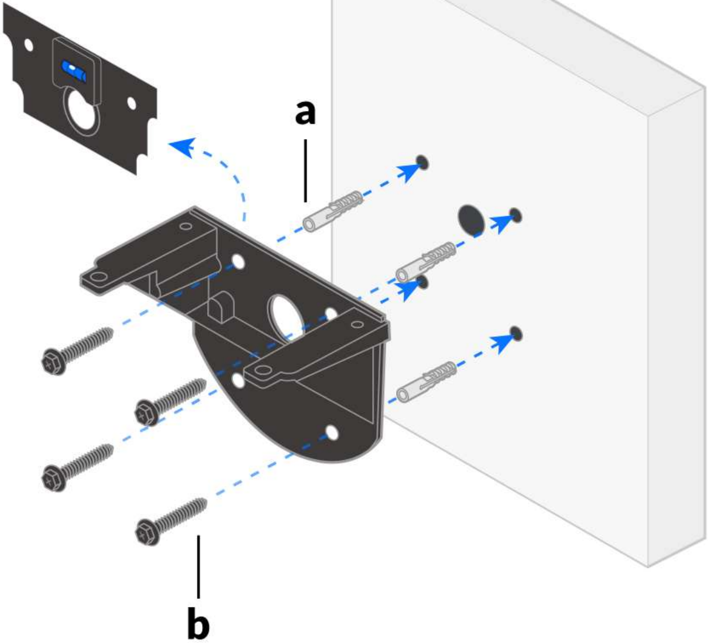

5

ui.com/install

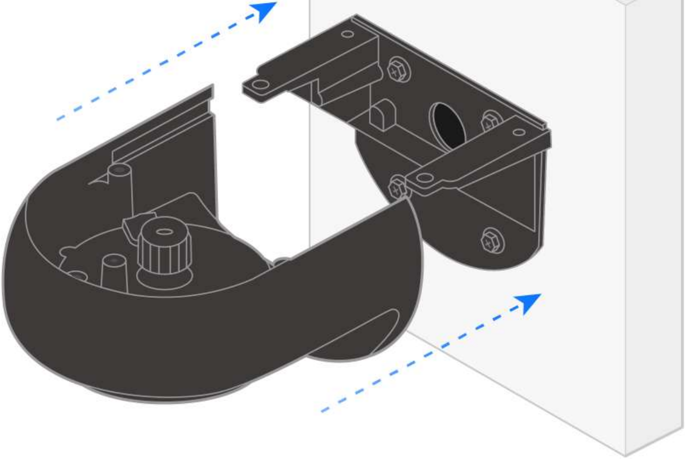

6

ui.com/install

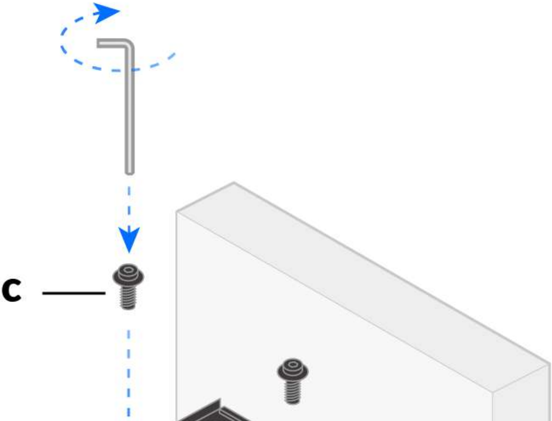

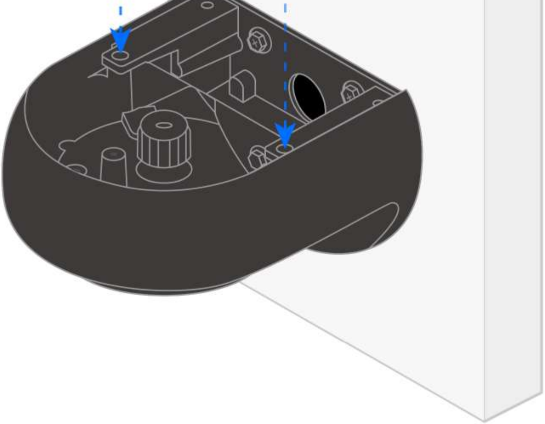

7

ui.com/install

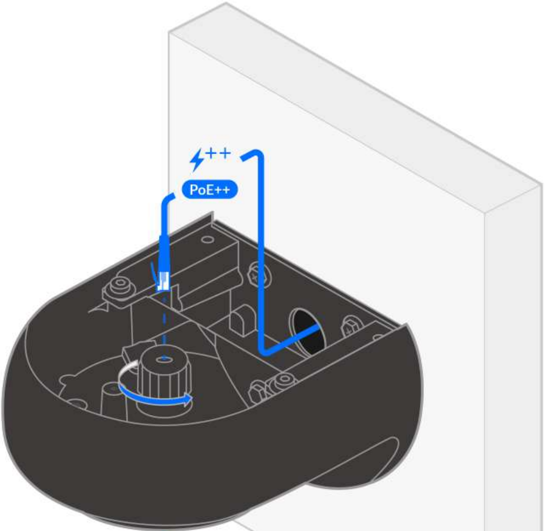

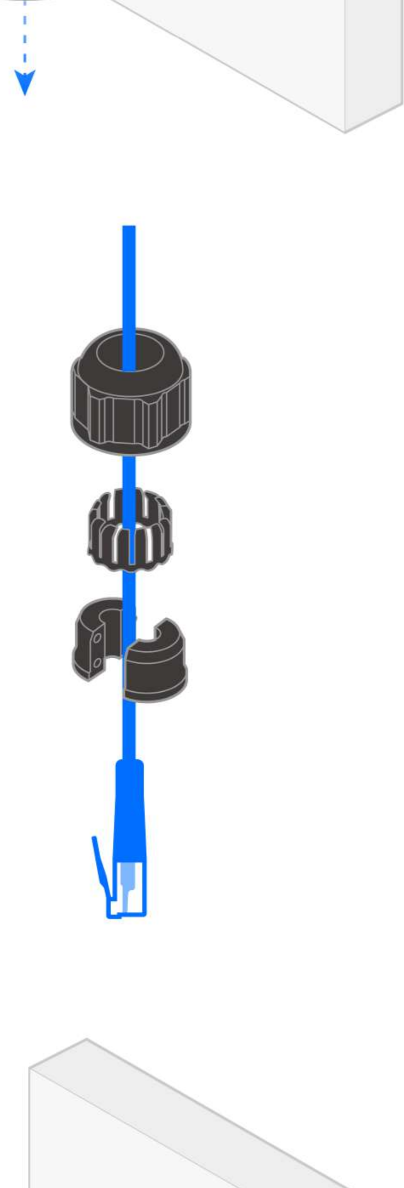

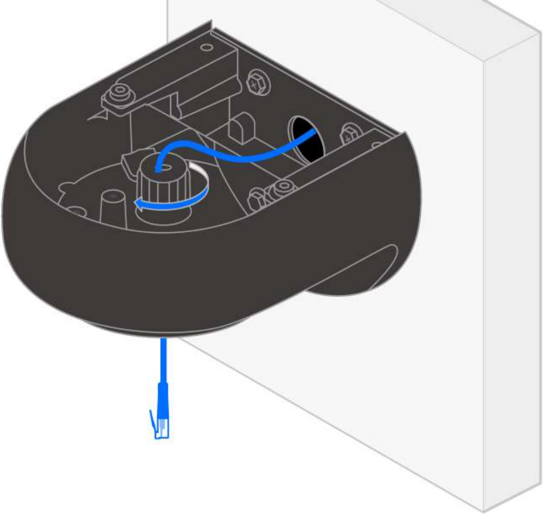

8

ui.com/install

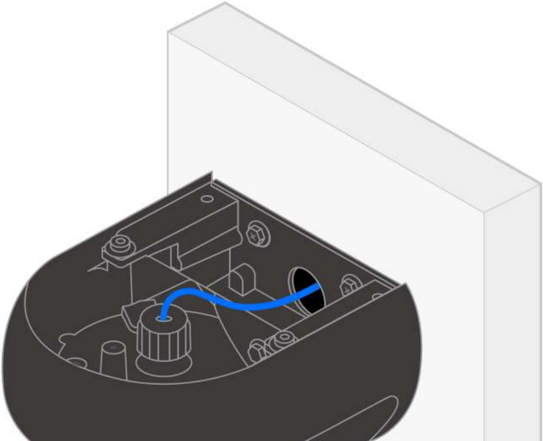

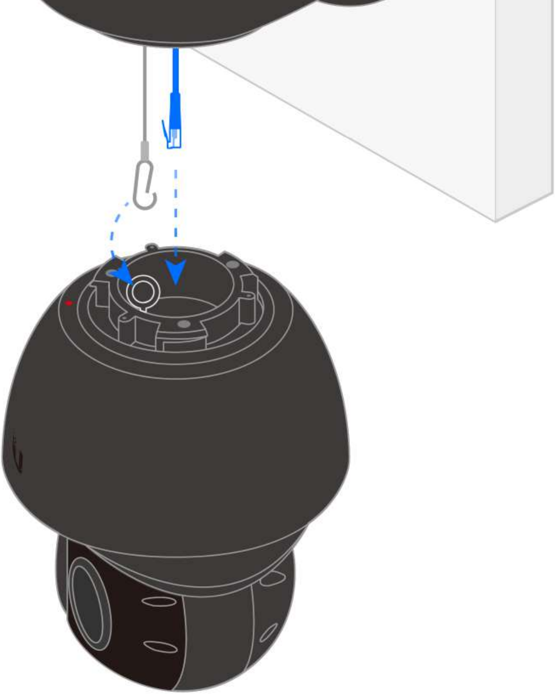

9

ui.com/install

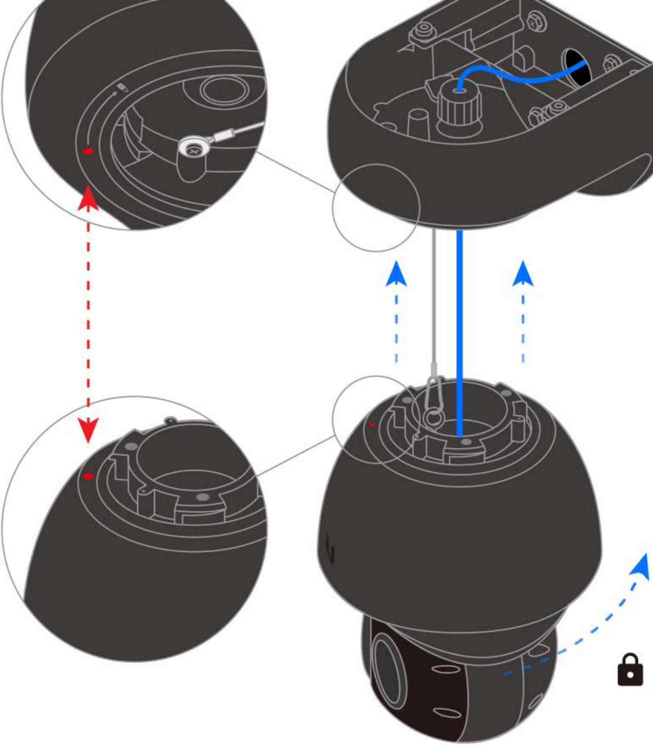

10

ui.com/install

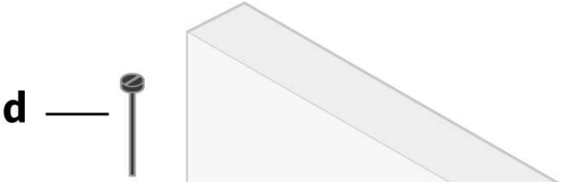

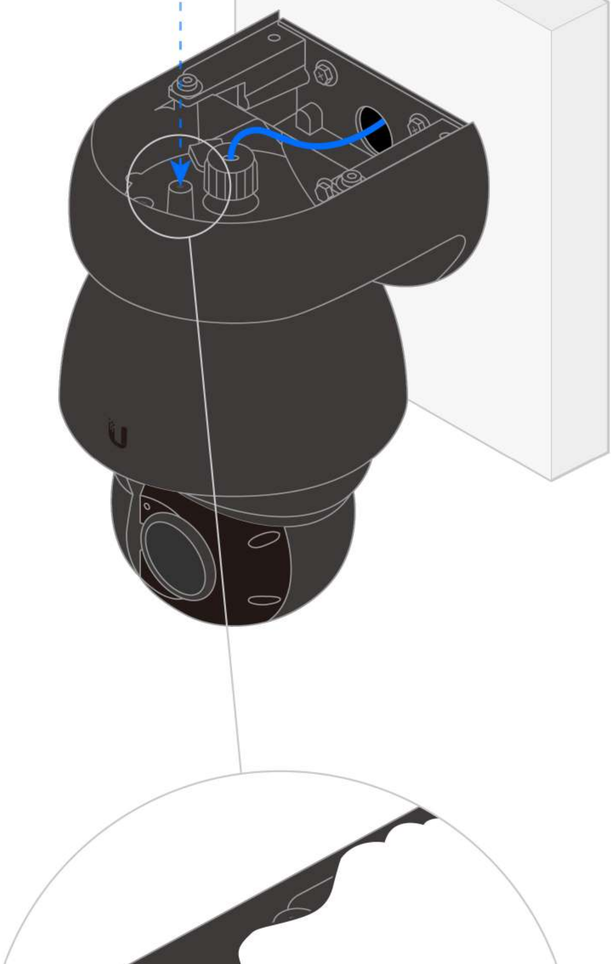

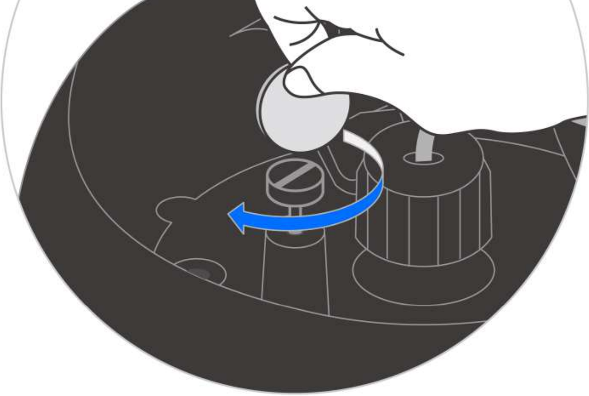

11

ui.com/install

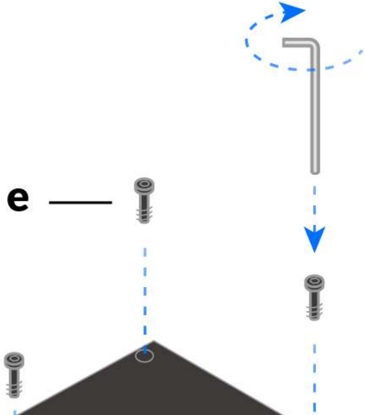

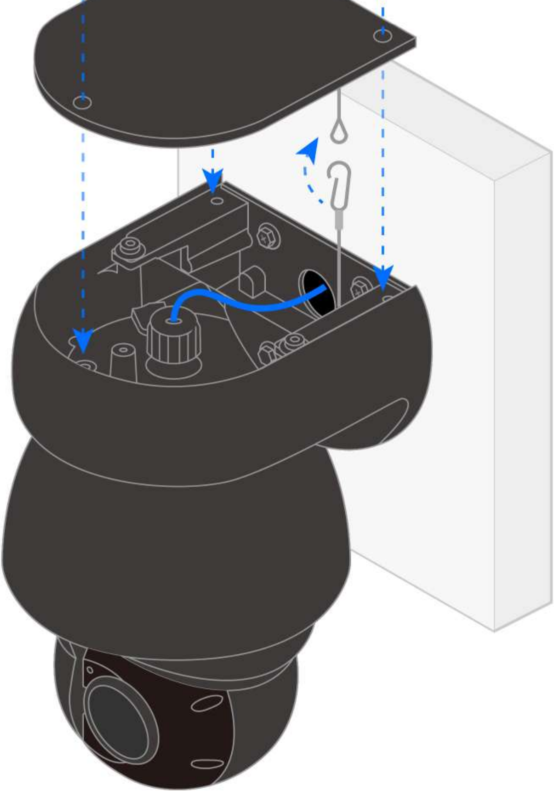

12

ui.com/install

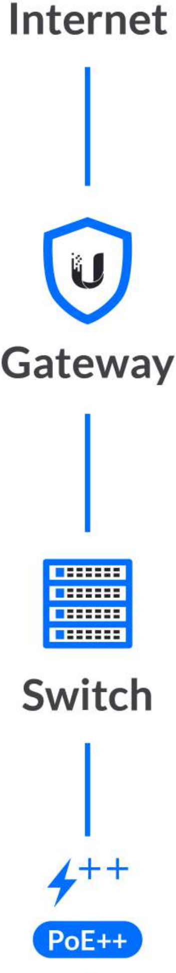
Internet
Gateway
Switch
PoE++

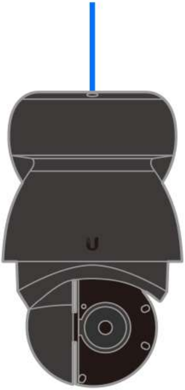

13

ui.com/install

Download on the App Store

GET IT ON Google Play

UniFi Protect

		Get Answers help.ui.com
UniFi Protect	Installation Video	UI Support
⌄	›	›